AVERY DENNISON MARKETING SPECIFICATION

THE SUBJECT MATTER DISCLOSED HEREIN EMBODIES PROPRIETARY INFORMATION WHICH IS THE CONFIDENTIAL PROPERTY OF THE AVERY DENNISON CO. NONE OF WHICH SHALL BE COPIED, REPRODUCED, DISCLOSED TO OTHERS, PUBLISHED OR USED IN WHOLE OR IN PART, FOR ANY PURPOSE OTHER THAN THAT FOR WHICH IT IS BEING MADE AVAILABLE WITHOUT THE EXPRESS ADVANCE WRITTEN PERMISSION OF A DULY AUTHORIZED AGENT OF THE COMPANY. THIS DOCUMENT IS THE PROPERTY OF THE AVERY DENNISON CO. AND IS TO BE RETURNED TO THE COMPANY ON DEMAND.

HISTORY

REV.	DATE	DESCRIPTION
G	05.01.13	UPDATED TO NEW FORMAT; RENUMBERED DUE TO REMOVAL OF BALLOON 5; CHG 6.20IN DIM TO 6.15IN
H	04.03.14	ADDED NOTE TO ITEM 8 AND UPDATED ITEM 5 AND 9

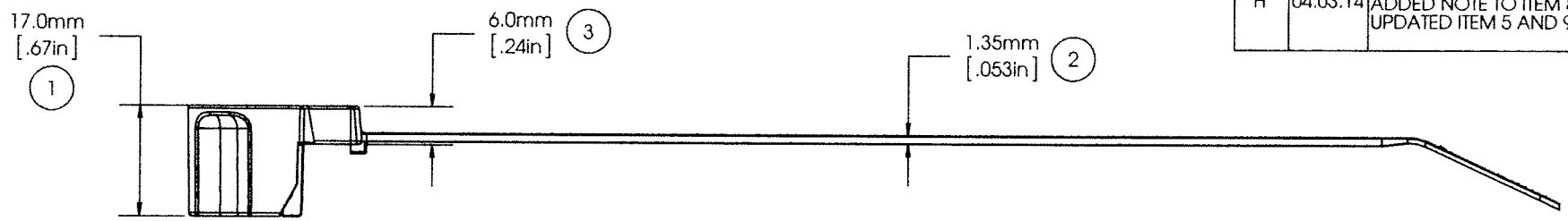

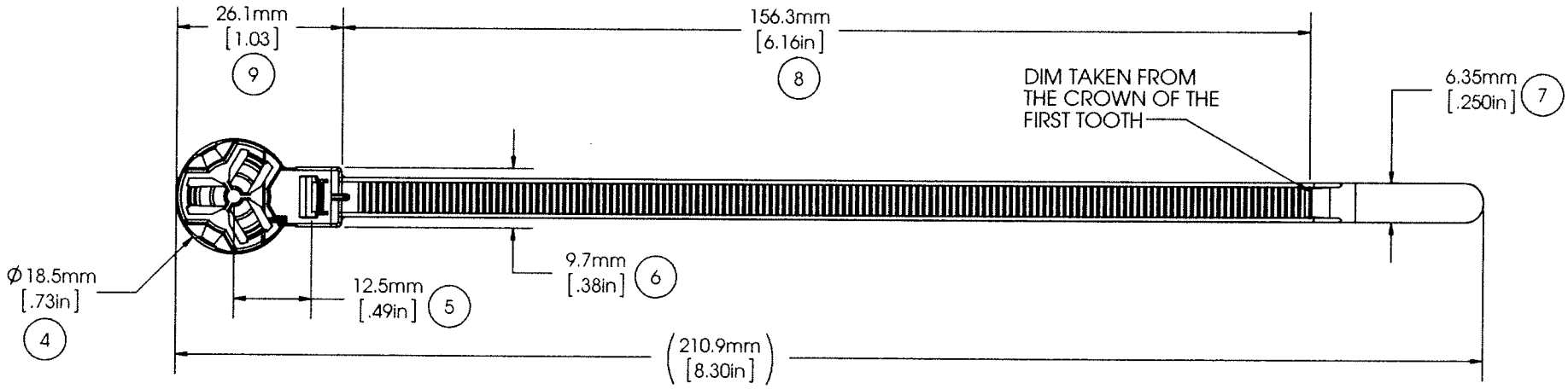

MOUNTING:	M8 STUD
TENSILE STRENGTH:	50 LBF / 22.7 KGF MIN.
OPERATING TEMP RANGE:	-40°F (-40°C) TO 220°F (105°C)
WEIGHT:	3.37 GRAMS
BUNDLE DIAMETER:	Ø1.6MM TO Ø44.5MM
TOOL:	TOOL, HAND ADJUSTABLE, FOR PLASTIC TIE DOWN STRAP. AVERY DENNISON PART NO. 12001-0
TOOL TENSION SETTING:	6 - 8
PACKAGING:	500/BAG, 10 BAGS/MASTER

APPROVALS:

ENG. APPR. 4/4/14

Q.A. APPR. 4/3/2014

AVERY DENNISON

FASTENER DIVISION
FITCHBURG, MA 01420 U.S.A.
TEL. 1-800-225-5913
FAX. 978-353-8157

SPECIFIED TOLERANCES ARE:

.XX ± .03 INCHES .X ± .7 MM

.XXX ± .01 INCHES .XX ± .25 MM

ANGULAR: ± 2°

MATERIAL: NYLON 6/6, IMPACT MODIFIED, HEAT STABILIZED

COLOR: BLACK

DESCRIPTION: M8 WELD STUD TIE

STOCK NO.: 20011-0

REV.: H

5 4 3 2 1